RUL

120 - 150 -170

Rullo Compattatore
Roller compactor
Rouleau Compacteur
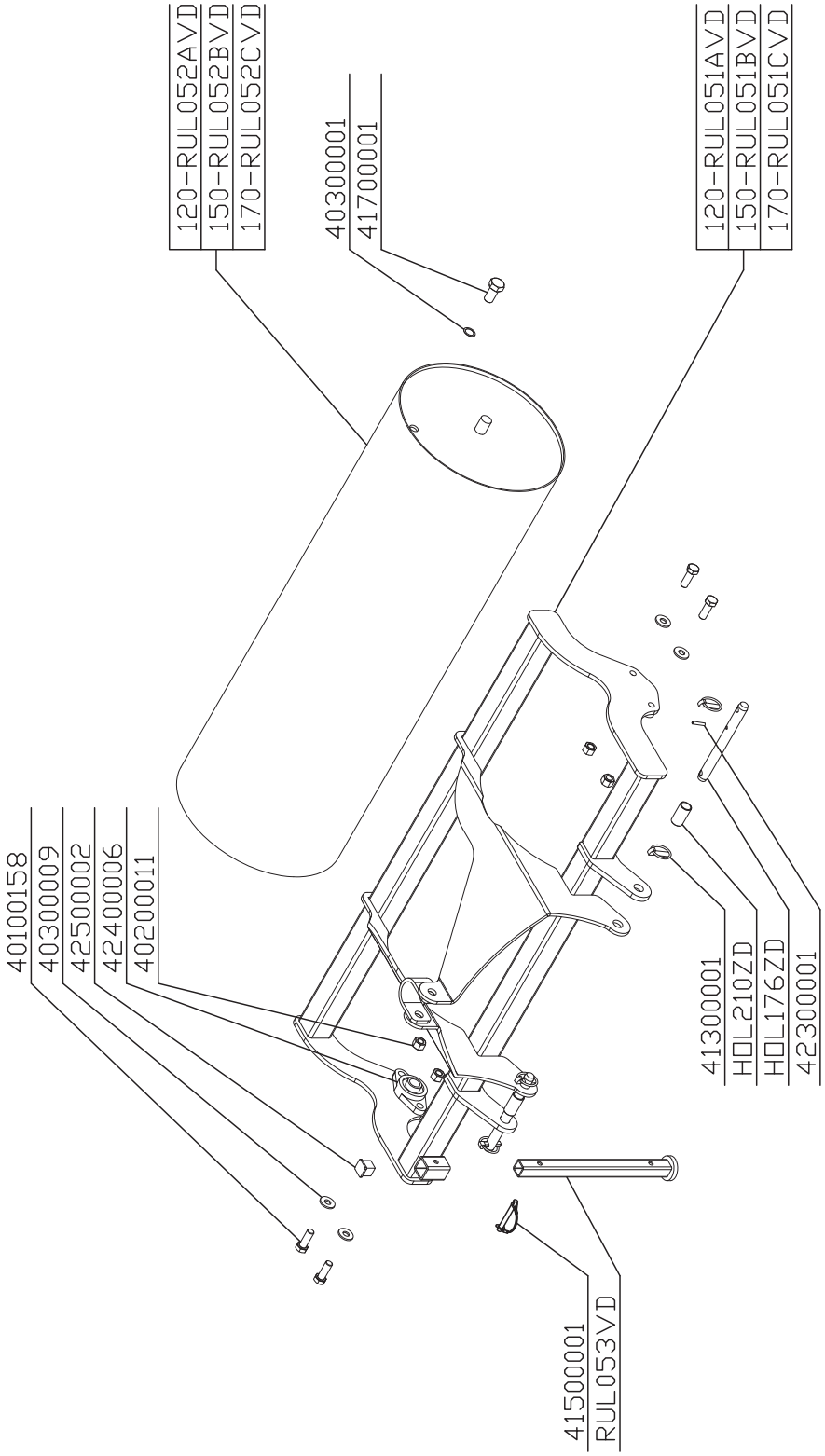
TELAIO - FRAME - CHASSIS